ORIGINAL ARTICLE

Intelligent Flow Regime Identification Using IR Sensor and 3.5mm Headphone Jack

G. C. Keerthi Vasan[1] and Muniyandi Venkatesan[1, *]

[1] *School of Mechanical Engineering, SASTRA University, Thanjavur, India*

(**Received** 29 June 2017; **Accepted** 1 August 2017; **Published on line** 1 September 2018)

*Corresponding author: mvenkat@mech.sastra.edu

DOI: 10.5875/ausmt.v8i3.1519

Abstract: Multiphase flow occurs in variety of applications in Industries and in nature. One of the most important subcategory of multiphase flow is gas-liquid flows predominantly found in evaporators, condensers, micro-reactors, cryogenic engines and in compact heat exchangers. In the present study, air-water two phase flows in a 4.7mm inner diameter glass tube with 0.3mm thickness is characterized using an IR transceiver and a headphone jack. The output of the IR receiver is sent to the laptop using a 3.5mm headphone jack. The novelty in the present work is that this eliminates the need for a dedicated micro-controller/ DAQ system to process the data. A simple program written in python is used to process the input of the mic and provide amplitude and frequency information which identifies the flow regime. High-Speed Images captured simultaneously are used to validate the output obtained using the headphone jack.

Keywords: Headphone jack; Infrared sensor; python; two phase; flow regime

Introduction

Two phase flows are of great industrial importance and throughout the years numerous techniques have been employed in order to identify the flow regime and also to determine the thin film thickness of flows. Jaganathan et al. [1] characterized two phase flow patterns based on variation in the laser patterns produced. The variation was due to interaction of light with different mediums of different refractive indices. Arunkumar et al. [2] were able to accomplish the same using Infrared sensors. An iterative filtering reconstruction algorithm was proposed by Xue et al. [3] which was applied to gamma-CT based two phase flow measurements. Coleman and Garimella [4] used high speed photography to identify the flow regimes. Brown et al. [5] were able to classify the different flow regimes obtained in a horizontal gas-liquid pipe based on pressure drop observed. With the advancement of technology, holography was incorporated by Van Hout et al. [6] to study fiber suspension flows. Morikawa et al. [7] used optical fibers for the measurement of particle velocity and concentration. Meng et al. [8] used ERT (Electrical Resistance Tomography) and a venturi-meter for the determination of flow regime. Reinecke and Mewes [9] incorporated multi-electrode capacitance sensors to visualize transient two phase flows. Nazemi et al. [10] were able to measure the void fraction and the flow regimes in two phase flows by using a gamma-ray transmission technique. Verma et al. [11] explored the possibility of using the headphone jack as a DAQ system. This paved the way for the hijack module that is commercially sold at $79.

Most of the works mentioned in the literature above involve some deal of complexity as they require a costly DAQ to process the data and analyze the flow. With advancements in sensor technologies, there arises a need to determine the flow regimes with cost effective systems which can bring down the complexities associated with processing of data. Such processing may be simplified by employing advanced transform techniques like FFT. In one of our previous work [12], a headphone jack connected with an android mobile phone was used to process the signals from a ultrasonic sensor. The present study focuses on a technique to determine the regime of

Copyright © 2018 International Journal of Automation and Smart Technology

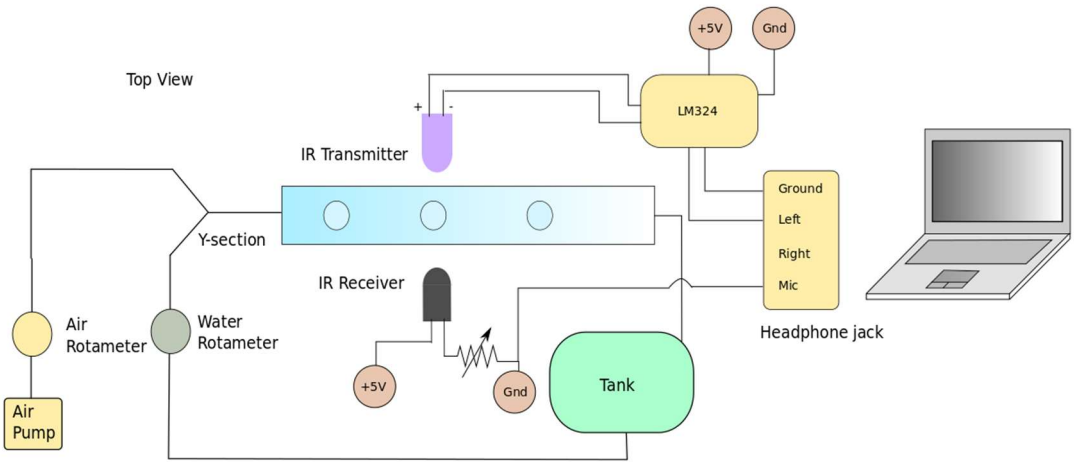

Fig. 1. Air-water two phase flow Experimental setup.

two phase flow using a headphone jack and an IR sensor by eliminating the need for a DAQ/microcontroller.

Experimental Setup

A diagrammatic representation of the experimental setup is presented in Fig. 1. A borosilicate glass of 4.7 mm inner diameter and 0.3mm thickness is used for the experiment. The fluids are supplied by separate pumps. The volumetric flow rate of individual fluids is measured with separate rotameters. 430 ppm Normal tap water is pumped using a 1400 Lph, 27W water pump from an open tank. Air is blown at slightly above the atmosphere pressure by an air pump. A Y section which is an integral part of the test section mixes air and water. By varying superficial velocities of air and water, various flow regimes (slug, slug train, bubble and bubble train) are observed. Plot of the Air velocity v/s the Water velocity (in m/s) used in the present study is provided in Fig.2. The length of the tube is 30 cm and the temperature of the water stored is in the range of 29-30°C.

Description of 3.5mm HeadphoneJack

The 3.5mm headphone jack is a popular connector used in mobile phones and computers for audio output and input. There are primarily two types of connectors - TRS and TRRS. This corresponds to the number of sleeves present on the headphone jack. TRS headphones have Left, Right and Ground and TRRS facilitates a mic i.e Left, Right, Mic and Ground (shown in Fig.3). The TRRS connector is used in the present study.

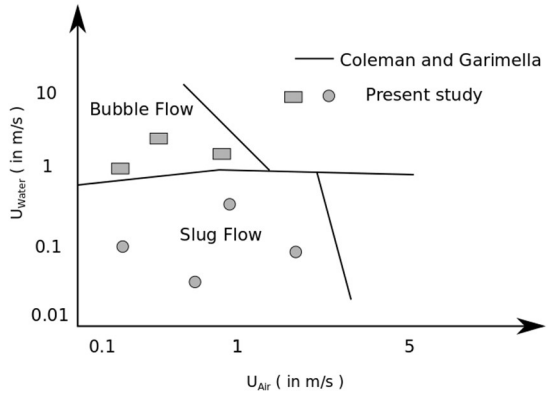

Fig. 2. Plot of superficial air velocity v/s the superficial water velocity (in m/s) used in the present study and one obtained by Coleman and Garimella (1999).

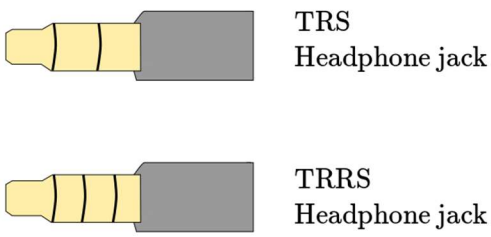

Fig. 3. TRS and TRRS type headphone jacks.

IR Transmitter-receiver

The IR sensor used is a commercially available IR333A model of diameter 5mm. An IR transmitter is placed on one side of the glass tube and an IR Receiver on the other. The transmitter and receiver are placed normal to the surface of the glass. 400 Hz square wave signal is

Venkatesan Muniyandi received his Ph.D. degree from Indian Institute of Technology (IIT) Madras, Chennai, India, in 2011. He is currently working as a Senior Assistant Professor at School of Mechanical Engineering, SASTRA University, Thanjavur, India. He has authored over 50 scientific papers in leading international journals and conferences. His current research interests include sensors for two-phase flow, heat transfer equipment design, soft computing, computational intelligence, and numerical modeling.
Corresponding author: mvenkat@mech.sastra.edu

G. C. Keerthivasan is currently pursuing the bachelor's degree in mechanical engineering with SASTRA University, Thanjavur, India. His current research interests include sensors for multiphase flows, multiphysics modeling and soft computing.
Mail: sriram960326@gmail.com

Copyright © 2018 International Journal of Automation and Smart Technology

given as input to the IR transmitter while the IR receiver is powered by a 5V battery source. The 400 Hz square wave is generated using Audacity (Audacity is an open source, free to distribute, cross-platform audio software for recording and editing) on the computer and amplified with LM324 Operational amplifier.

The IR receiver is connected to the mic pin of the headphone jack and thus any variation in the output signal of the IR receiver is relayed onto the computer as an audio signal for processing. A simple Python program written using standard libraries is used to display the output waveform and also plot the frequency spectrum it.

Audible Feedback

The choice of 400 Hz is arbitrary here and as long as it satisfies Nyquist's sampling criterion, any frequency can be used. The 3.3 V power supply from an arduino could also be used for powering the IR transmitter instead of the 400 Hz square wave signal, but one would not be able to obtain an audible feedback. The audible feedback transforms a quotidian stream of data into something that the human is most familiar with - Sound. This opens up a whole new field of technology where sensor data not only contains information but also has a human element to it. Such a system will be definitely helpful in identifying various flows regimes during crude oil extraction and oil transportation during which fluids of various phases simultaneously travel in a pipe line.

The purpose of using a computer in this case is to store and process the data from the IR receiver and also to provide a visual aid during the experimentation. But if one would like to modify the setup with only an audible feedback, the entire computer can be replaced with a simple speaker, 555 timer and a power source.

The 555 timer will provide the trigger pulse needed for the IR Transmitter and the output from the IR Receiver is relayed to a speaker. A schematic of this as reference has been provided in Fig. 4. During experiments, the slug and bubble flows could be clearly distinguished based on the audible feedback.

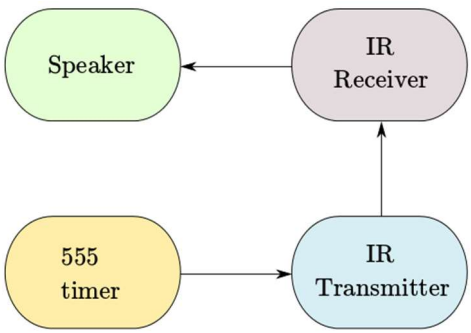

Fig. 4. Schematic without using the computer.

Results and Discussion

The results obtained by using a IR transceiver along with a 3.5mm headphone jack is discussed in this section. Section 3.1 details the method of identification using IR Sensor while section 3.2 details the validation procedure.

Flow Regime Identification Using IR Sensor

When the two phase flow occurs in the tube, the IR transceiver excited sends the output signal through the headphone jack. The mic data is further processed to analyse the amplitude variation by employing FFT. A python program is written that is used to capture the mic data, compute the FFT, and plot Amplitude and frequency variations. This is accomplished using the NumPy, SciPy and Matplotlib packages. The sampling rate is kept at 44100 Hz and the size of the chunk used for FFT is 441. The variation in the amplitude with respect to time for a bubble and slug respectively are shown in Fig. 5 and Fig. 6. A bubble flow is characterized by spherical or non spherical air bubble whose diameter is same or lesser than that of the tube diameter. A slug flow regime in the present case may be due to increase in size of the bubble and elongate because of its dimension more than the diameter of the tube. The two phase flow of air and water is characterized by the distinct drop in the amplitude of the audio signal.

This change in amplitude is attributed to the varying refractive indices of the air and water mediums. In order to characterize the flow regime, the threshold value above which corresponds to the single phase flow of water is determined. In Fig. 5 and Fig. 6, this threshold value is 2500. The threshold value depends on the distance between the IR receiver and transmitter, and also their orientation. But these parameters are kept constant (diameter of the tube) throughout the experiment and hence the threshold value remained constant.

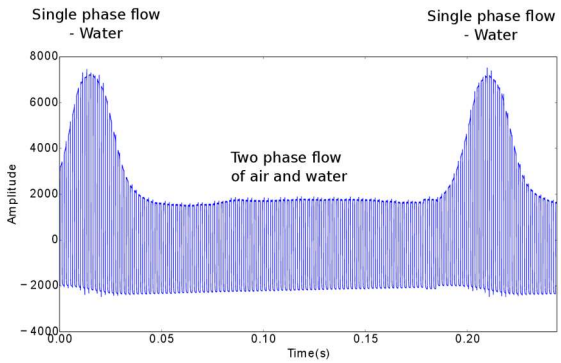

Fig. 5. Plot of Amplitude v/s time – Bubble.

Copyright © 2018 International Journal of Automation and Smart Technology

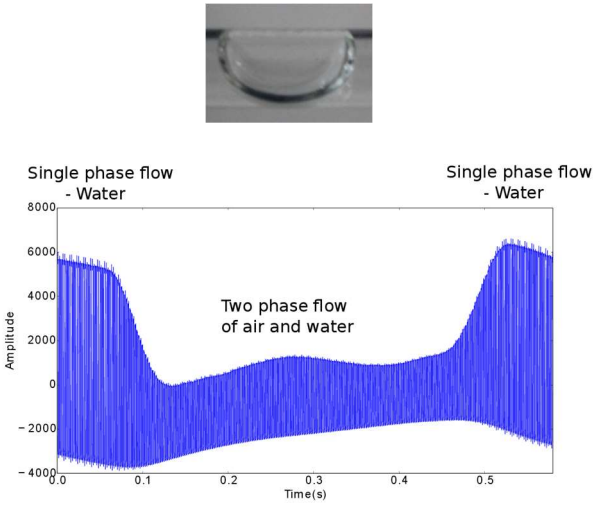

Fig. 6. Plot of Amplitude v/s time – Slug.

Accurate determination of this threshold value will help in determining the interface of air and water mixture. This will also be helpful in determining liquid film thickness which occurs in bubble and slug flow regime if the technique is properly calibrated which is the scope for future work.

Frequency Variation

To determine the regime of flow, cut-off amplitude of 2500 is included in the python program. Any signal below the cut-off amplitude of 2500 is assigned an amplitude value of 0. This filtered signal is passed on for the FFT. The plot of the variation in the frequency obtained by the IR receiver for a bubble is presented in Fig. 7 and for a slug in Fig. 8. The identification of the flow regimes is accomplished by measuring the total time (t) of occurrence of the 400 Hz signal. For slugs, this time t is longer and for bubbles it is smaller. From the obtained value of 't', one can also determine the length of the slug and diameter of the bubble.

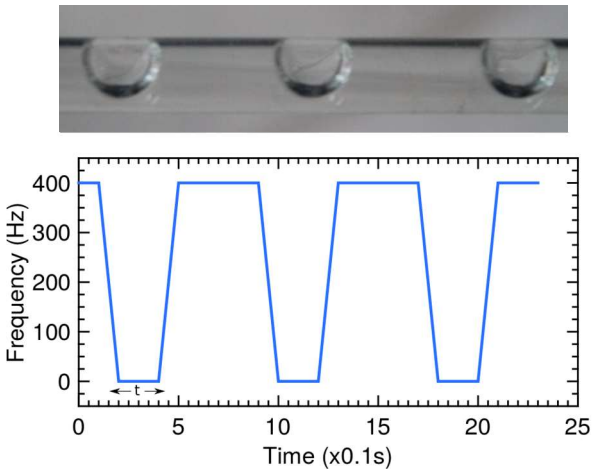

Fig. 7. Plot of Frequency v/s time - Bubble Train.

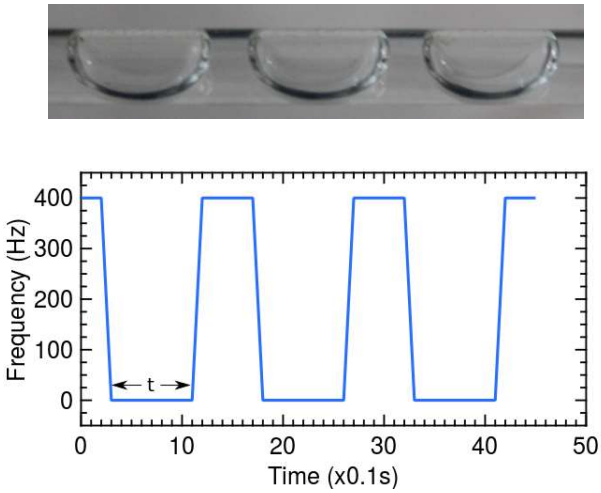

Fig. 8. Plot of Frequency v/s time - Slug Train.

The ingenuity in the work lies in the elimination of a DAQ/microcontroller for the processing of IR sensor data for determining the flow regime and transforming the data stream into an audible feedback for the user. The audible feedback that is obtained as a result can be used to supplement the visual phenomenon. This makes the act of experimentation more human-friendly and comprehensible.

Frequency Variation

In order to validate the work, another set of readings are taken simultaneously using a Laser-Image processing technique. A detailed discussion on this technique is available in [14]. A laser pointer is placed on one side of the tube and a screen is placed on the other to capture the image formed. High speed images of the screen are captured simultaneously and the flow regime obtained using IR sensor is compared. The summation of the pixel intensities are found out from the image by rastering every column. The plot of the variation in the pixel intensity versus time is plotted for slug flow in Fig. 8 and a representation of the flow pattern is provided alongside with the plot as a reference. From this information the flow regimes are determined.

The time of occurrence of the peaks are captured and the data is compared with the one obtained by the headphone jack and IR sensor. A quantitative comparison between Fig. 8 and Fig. 9 shows that the patterns of flow regimes are almost similar. More detailed analysis needs to be carried out so that the proposed method of using the IR sensor combined with a simple headphone jack is competent with existing methods. The system is reliable and cost-effective way of determining the flow regime in two phase flow while also offering audible feedback to the user.

Copyright © 2018 International Journal of Automation and Smart Technology

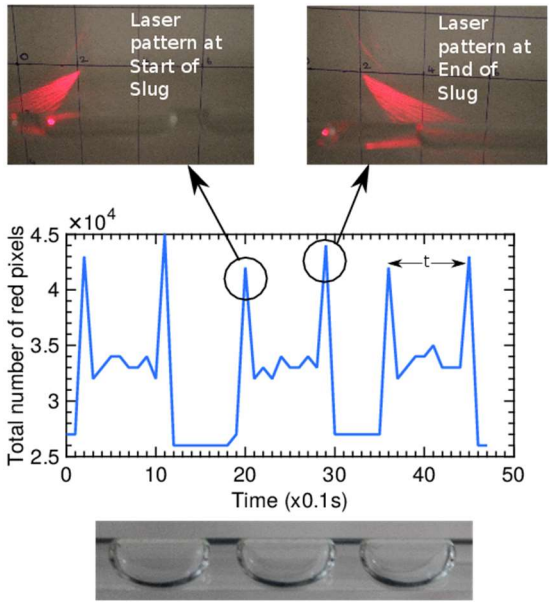

Fig. 9. Plot of total number of red pixels vs time along with a pictorial representation of the flow – slug regime.

Conclusion

In the present work, intelligent flow regime identification of two phase flow of air and water is accomplished using an IR sensor amalgamated with the headphone jack. The variation in frequency and amplitudes obtained as a result, are used as a means for characterization of the regime. The obtained results using the IR sensor and headphone jack are validated with Laser Image Processing technique. The entire experiment is done using open source packages. The determination of thin film thickness using the same set up is a topic for future study.

Acknowledgements

The authors gratefully acknowledge the financial grant provided by DST/SERB Grant No. YSS/2015/000029 for carrying out this work.

References

[1] N. Jagannathan, B. Chidambaram, A. Seshadri, and V. Muniyandi, "Characterization of Gas-Liquid Two-Phase Flows Using Laser Patterns," *The Canadian Journal of Chemical Engineering*, vol. 93, no. 9, pp. 1678-1685, 2015. doi: 10.1002/cjce.22242

[2] S. Arunkumar, J. Adhavan, M. Venkatesan, S. K. Das, and A. R. Balakrishnan, "Two phase flow regime identification using infrared sensor and volume of fluids method," *Flow Measurement and Instrumentation*, vol. 51, pp. 49-54, 2016. doi: 10.1016/j.flowmeasinst.2016.08.012

[3] Q. Xue, H.-X. Wang, K.-H. Hao, and S. Xin, "Iterative Filtering Reconstruction Algorithm For Gamma Computerized Tomography: Application To Two-Phase Flow Visualization," *Instrumentation Science and Technology,* vol. 40, no. 1, pp. 1-16, 2012. DOI: 10.1080/10739149.2011.633142

[4] J. W. Coleman and S. Garimella, "Characterization of two-phase flow patterns in small diameter round and rectangular tubes," *Int. J. Heat Mass Transfer*, vol. 42, no. 15, pp. 2869-2881, 1999. 10.1016/S0017-9310(98)00362-7

[5] R. Brown, G. Sullivan, and G. Govier, "The upward vertical flow of air-water mixtures: III. Effect of gas phase density on flow pattern,holdup and pressure drop," *The Canadian Journal of Chemical Engineering*, vol. 38, no. 2, pp. 62-66, 1960. doi: 10.1002/cjce.5450380207

[6] R. Van Hout, L. Sabban, and A. Cohen, "The use of high-speed PIV and holographic cinematography in the study of fiber suspension flows," *Acta Mechanica*, vol. 224, no. 10, pp. 2263-2280, 2013. doi: 10.1007/s00707-013-0917-z

[7] Y. Morikawa, Y. Tsuji, and T. Tanaka, "Measurements of horizontal air-solid two- phase flow using an optical fiber probe. (particle velocity and concentration)," *Nippon Kikai Gakkai Ronbunshu, B Hen/Transactions of the Japan Society of Mechanical Engineers, Part B*, vol. 51, no. 467, pp. 2321-2329, 1985. doi: 10.1299/kikaib.51.2321

[8] Z. Meng, Z. Huang, B. Wang, H. Ji, H. Li, and Y. Yan, "Air–water two-phase flow measurement using a Venturi meter and an electrical resistance tomography sensor," *Flow Measurement and Instrumentation*, vol. 21, no. 3, pp. 268-276, 2010. doi: 10.1016/j.flowmeasinst.2010.02.006

[9] N. Reinecke and D. Mewes, "Multielectrode capacitance sensors for the visualization of transient two-phase flows," *Experimental thermal and fluid science*, vol. 15, no. 3, pp. 253-266, 1997. doi: 10.1016/S0894-1777(97)00013-7

[10] E. Nazemi, G. H. Roshani, S. A. H. Feghhi, S. Setayeshi, E. Eftekhari Zadeh, and A. Fatehi, "Optimization of a method for identifying the flow regime and measuring void fraction in a broad beam gamma-ray attenuation technique," *International Journal of Hydrogen Energy*, vol. 41, no. 18, pp. 7438-7444, 2016. doi: 10.1016/j.ijhydene.2015.12.098

[11] S. Verma, A. Robinson, and P. Dutta, "Audio DAQ: turning the mobile phone's ubiquitous headset port

Copyright © 2018 International Journal of Automation and Smart Technology

into a universal data acquisition interface" *SenSys*, pp. 197-210, 2012.

[12] G. C. Keerthi Vasan, B. Suresh, and M. Venkatesan, "Agile and cost effective ultrasonic module for the visually impaired using a headphone jack: Implications for enhancing mobility aids," *British Journal of Visual Impairment*, vol. 35, no. 3, pp. 275-282, 2017. doi: 10.1177/0264619617717343

[13] G. C. Keerthi Vasan and M. Venkatesan, "Determination of thin film thickness using Optics and Image Processing," *Journal of Advanced Fluid Mechanics*, vol. 10, no. 3, pp. 925-932, 2017. doi: 10.18869/acadpub.jafm.73.238.27033

Copyright © 2018 International Journal of Automation and Smart Technology